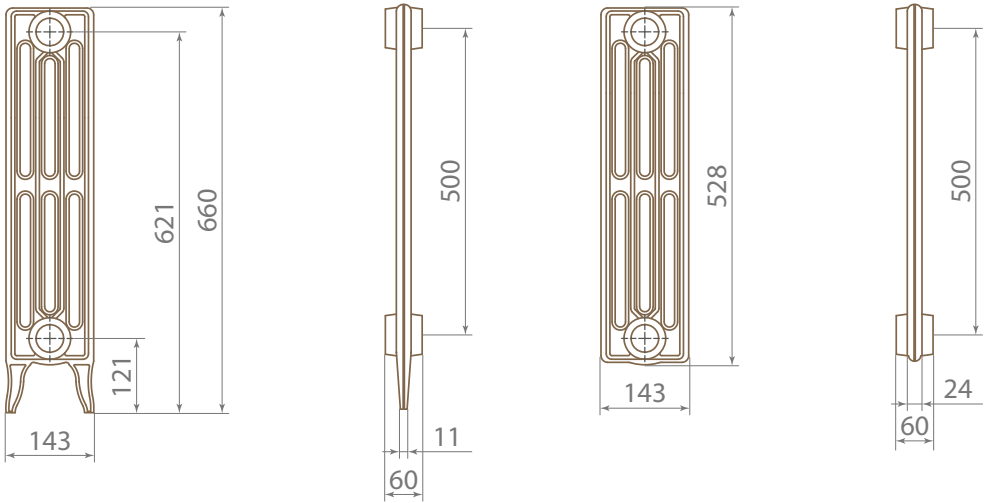

Neo 660/500